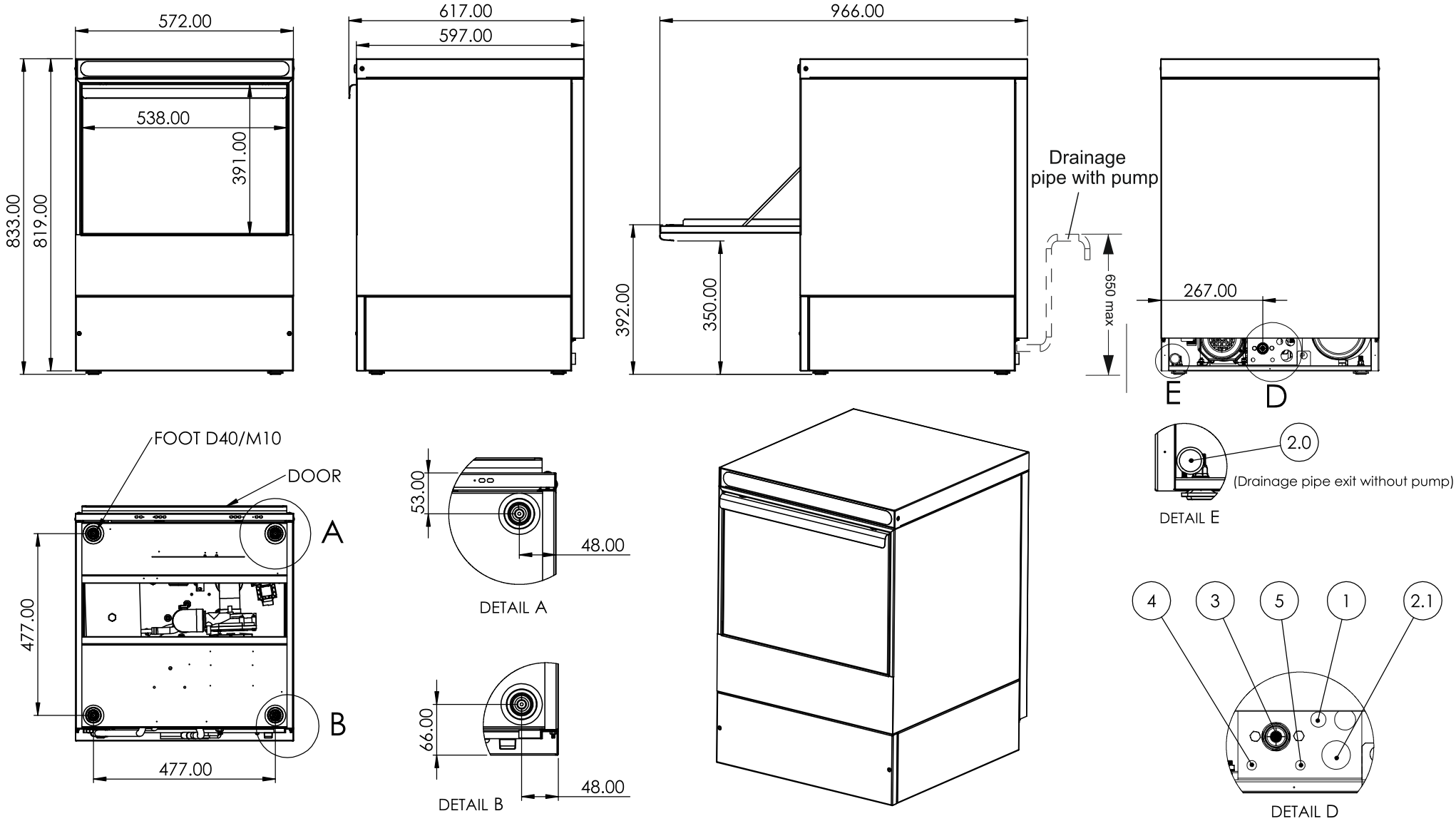

MACHINE PROPERTIES				
CAPACITY (Lt)		3 PHASE (3N)	**VOLTAGE (V)**	380-415V-3N-50/60Hz
Boiler	**Tank**		**Max.Amp./Phase**	12.2
6	35		**Max.Loading (KW)**	6.6
WEIGHT (Kg)		SINGLE PHASE (1N)	**VOLTAGE (V)**	220-240V-1N-50/60Hz
Net	**Gross**		**Max.Amp./Phase**	15.4
55	60		**Max.Loading (KW)**	3.6

BALLOON INFORMATION	
1.	220-240V-1N-50/60Hz ▸ Electrical Supply Connection (H05 VV-F 3x2,5mm, Cable length without plug : 1,3m) 380-415V-3N-50/60Hz ▸ Electrical Supply Connection (H05 VV-F 5x2,5mm, Cable length without plug : 1,3m)
2.	**2.0** Drainage pipe (1,4m) OD28-ID24(No drainage pump) / **2.1** Drainage pipe (1,0m) OD22-ID19 (With drainage pump)
3.	Inlet Male Nozzle Threaded End G3/4" for Water Supply (Pipe length : 1.5m)
4.	Rinse Aid Flexible Pipe Pos.(Blue) (Outer Diameter 6mm - L:1400mm)
5.	Detergent Flexible Pipe Pos. (Clear) (Outer Diameter 6mm - L:1400mm)

INSTALLATION DRAWING
MODEL 50

ELVIOMEX
PROFESSIONALWAREWASHINGMACHINES

R1